OPTICAL TIME DOMAIN REFLECTOMETRY (OTDR)
PRIMER

OPTICAL FIBER

Optical fiber is composed of a transparent, light carrying, core surrounded by a cladding. The core diameter and cladding are chosen such that light will remain within the fiber. This is due to the fact that the light wave introduced into the fiber core has a fixed frequency. As such, the light wave's angle of incidence to the fiber walls is also fixed within a given range. Thus, the core diameter is chosen such that the light wave reflects back into the transmission core instead of escaping into the cladding. This internal reflection maintains the light signal.

Fiber optic cables are provided in two transmission "modes", multimode and singlemode. Multimode fiber has an inner core diameter such that light can travel many different paths (modes) through the core of the fiber. These enter and leave the fiber at various angles. Single mode fiber allows only one "mode" or transmisson path. This is done by reducing the inner core of the fiber to such a diameter that other transmission modes are eliminated.

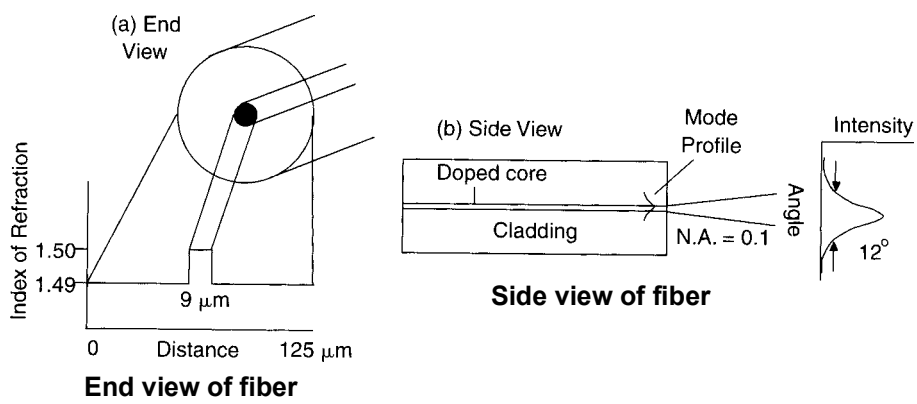

Single mode fiber optic cable (After Derickson, "Fiber Optic Test and Measurement, 1998")

Figure 1

Single mode fiber is preferred at present, by this firm, for geotechnical OTDR monitoring. This is due to its greater transmission length and apparent greater sensitivity to bending, shown during testing, as compared to multimode fiber.

LIGHT LOSS

Three light loss factors along the optical path (fiber) are key to OTDR testing. These are:

- Scattering;
- Reflection, and;
- Absorption

Attenuation

Attenuation is the gradual reduction of light intensity along the optical fiber as a function of distance from the source. The attenuation characteristics of an optical fiber are a result of two factors, absorption and scattering.

Absorption within the travel path is primarily caused by impurities within the fiber core, the dopants used on the external surface of the transmitting optical fiber between the transmission path and the cladding (Figure 1), and by the presence of water as OH^- ions. This latter factor can be utilized to detect water intrusion (and potentially piezometric levels) through the fiber jacket.

The largest cause of attenuation is light scattering. Scattering occurs when light collides with individual atoms within the fiber optic cable. As such, it is anisotropic in nature. Scattered light that that impinges on the fiber at angles outside the numerical aperture of the fiber will be absorbed into the cladding or transmitted back toward the source.

It may be noted that scattering is a function of wavelength, increasing as the fourth power of the transmitted light wavelength. Therefore, for long distance transmission, scattering is minimized by choosing the longest practical wavelength.

Bending Losses

Fiber optic cables are also subject to losses as a result of stress and bending. Macrobends, large bends on the order of centimeters, cause deflection of the core/cladding interface such that absorption takes place. As the light attempts to negotiate the bend, some light exceeds the reflection angle of the cladding and is absorbed. It is this property which is utilized in OTDR geotechnical monitoring for shear dislocation prior to complete cable shear. Microbending due to tiny imperfections of the core, or due to mechanical stress, can result in changes in geometry sufficient to allow light to escape the core as well. In both cases, some reflection also occurs.

OTDR OPERATION

An **O**ptical **T**ime **D**omain **R**eflectometer (OTDR) launches a short duration light pulse into the fiber. An in-line directional coupler switches the reflected light returning back along the fiber to a sensitive detector. By measuring the arrival time and magnitude of the returning light, the location and types of faults along the optical travel path can be determined. As this reflected light is only a minute fraction of the transmitted signal, multiple pulses and signal averaging are utilized to better isolate “events” or areas of optical difference along the light travel path. This is recorded on the OTDR as a “trace” as shown in Figure 2.

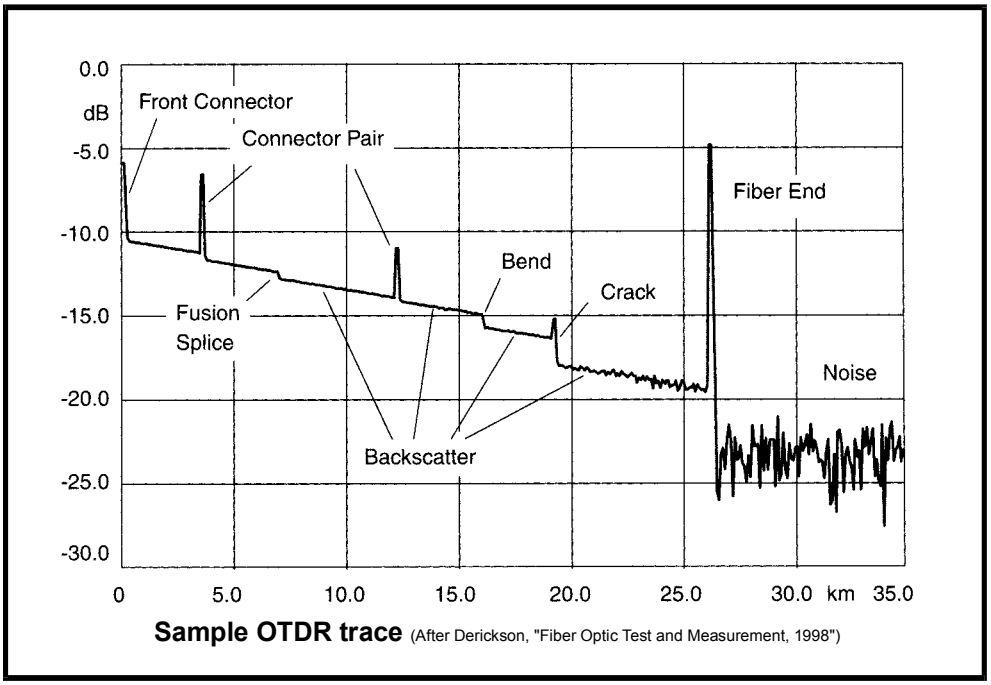

Figure 2

The OTDR conducts measurements by emitting a solid light pulse the length of the pulse width selected on the instrument. Thus, in a typical fiber, each nanosecond of laser pulse equals about 20 cm of fiber length. The greater the pulse width, the greater the total light within the fiber, and the larger the amount of backscattered light. The magnitude of the pulse is attenuated as it travels away from the source along the fiber and again as it returns from the source of reflection along the return path. If the optical pulse travels through a splice, bend, or connection, light will be lost and the pulse diminished. If the splice or break is reflective, then the OTDR trace will show a peak above the backscatter radiation. In all cases, it must be remembered that the total travel time is both the time to the event and the time returning to the detector, or twice time required for the true distance.

Note that the longer the pulse, the greater the backscattered light. However, this increase in pulse width decreases the accuracy of locating detectable events. Thus, for fine resolution work, the minimum pulse length that will allow resolution of the events being located should be selected. While this may not give a strong event signature, it will allow more accurate location of the event in question.

One item that is of special significance to geotechnical OTDR work is the effect of wavelength on bend effects. The longer the wavelength the less the light is restrained by the optically doped core. In the example shown in Figure 3, a single mode fiber was wound twice around a 23mm diameter mandrel. An OTDR trace was run for each of the following wavelengths: 1310nm, 1550nm, and 1625nm. Note the marked increase in loss due to bending effects.

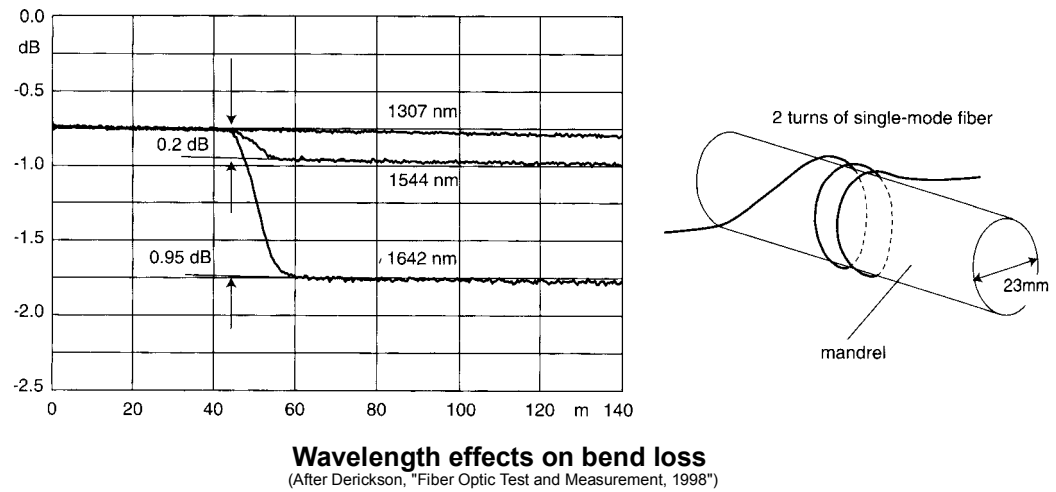

Wavelength effects on bend loss
(After Derickson, "Fiber Optic Test and Measurement, 1998")

Figure 3

OTDR Measurement Uncertainties

The OTDR 's distance resolution is limited by the transmitted pulse width. The transmitted pulse will cause crosstalk and reflections in the receiver if the event is too close to the instrument. The output signal simply blinds the receiver at the incredibly rapid speeds (the speed of light) which these measurements are taking place. In order to limit this effect, a launch cable is commonly utilized between the OTDR and the cable to be tested. This launch length is chosen such that the receiver has time to recover from the aforementioned crosstalk and reflections before any “important” reflections from the cable to be tested are received. The minimum length of the launch cable is dependent upon the wavelength and pulse width selected. However, an absolute minimum at the present level of technology should be about 20-25m.

Closely spaced events are also problematic for the OTDR. An “event dead zone” is present immediately after a detectable event on a fiber optic trace. While the first event is located correctly, any event occurring within this “dead zone” is masked by the backscatter from the first event. They are thus not resolvable into multiple events. Event dead zones are generally on the order of 1m-5m for high resolution OTDR devices.

Two sources of error are present in OTDR measurements that are not instrumented related. The velocity of the light pulse in the fiber is not constant. Both manufacturing processes and temperature differences along the length of the cable can effect the velocity of light propagation. In addition, more fiber is enclosed in the insulation than the insulation is long. About 1 to 2% extra fiber length is allowed during fabrication to compensate for twists, kinks, bends, and turns as compared to the insulation length. This must be accounted for when conducting base line tests for any installation.

Examples of OTDR fault location capabilities are given in the Figures 4 and 5.

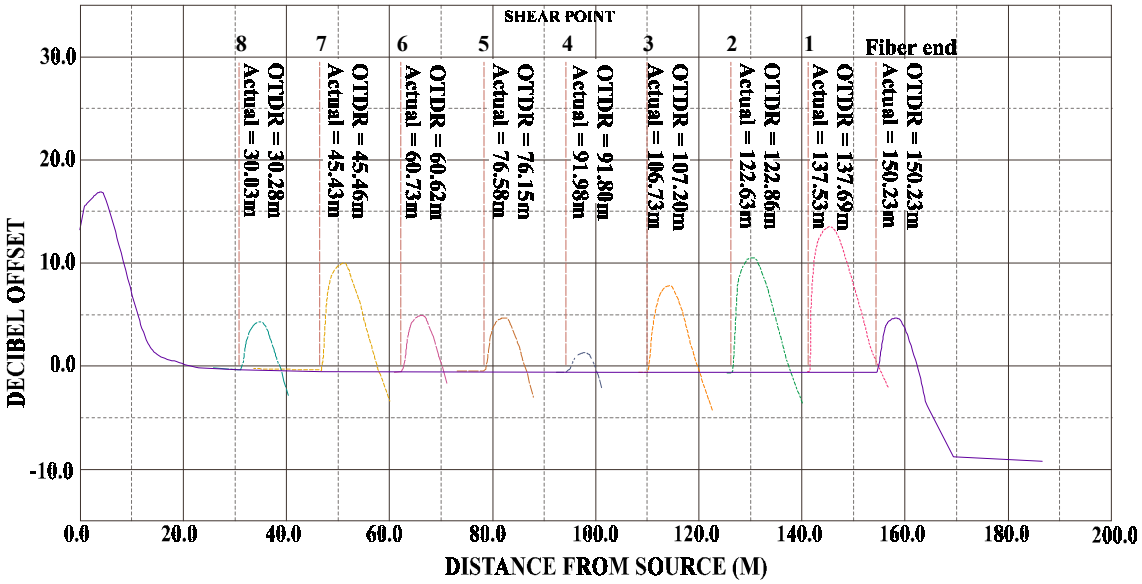

OTDR cable shear detection
Figure 4

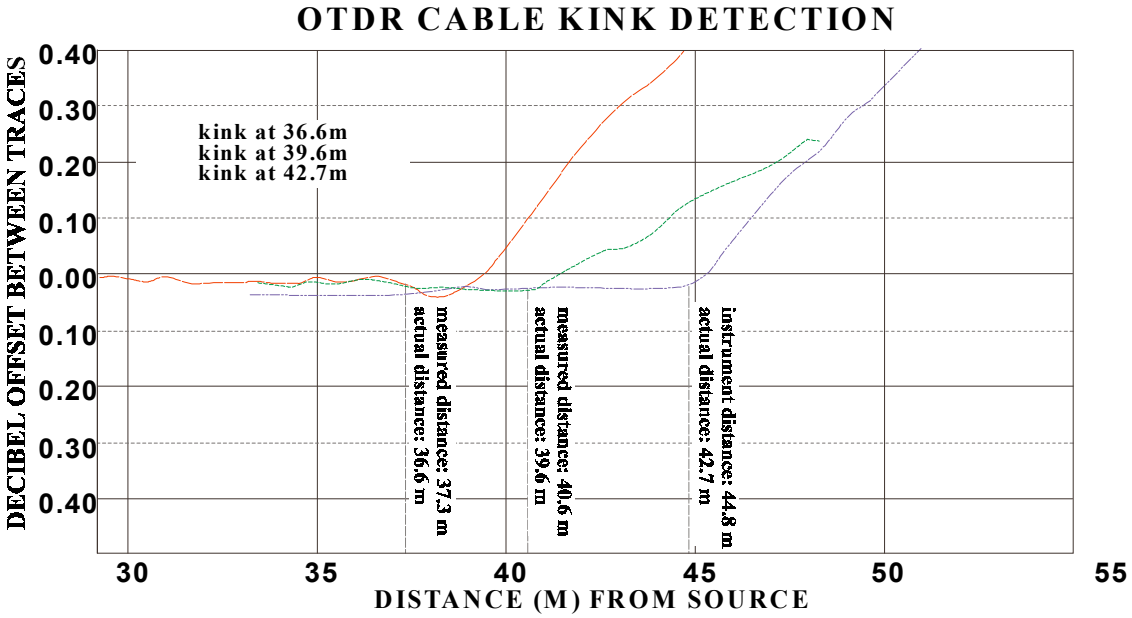

OTDR cable kink detection
Figure 5