OTDR GROUND MOTION MONITORING THROUGH ACTIVE FAILURES

A typical view of a OTDR device for detecting the location of displacement beneath active rock/soil failures utilizing sensor cable is shown as a perspective drawing in Figure 1 (perspective) and Figure 2 (section).

The sensor cable assembly for actively displacing rock and soil materials consists of an armored, reinforced, high strength sensor cable on the surface and to a depth within the borehole either above or slightly below the expected failure plane. This armored sensor cable is then either stripped of armoring, exposing the jacketed fibers within or, alternatively, fitted with a connector which can be coupled to unarmored sensor cable. The unarmored sensor cable extends into the remaining zone to be monitored.

The case where jacketed optical fiber is stripped from the armored sensor cable has advantages over the configuration where sensor cable is connected to the armored cable in that it is more sensitive to bending and has no event dead zone as a function of a connector.

Displacement magnifiers/anchors are attached to the unarmored portion of the sensor cable assemblage using previously discussed technologies. These are utilized to monitor displacement immediately above, at the base of, or below, the base of the active failure zone.

A large diameter drillhole (6” recommended) is drilled through the active failure to the estimated failure plane depth. This is then either continued below the failure plane or a smaller diameter hole (3” recommended) is drilled to a specified depth below the active failure plane. The fiber cable assembly is then inserted the full length of the borehole. A grout tube or tremie line is inserted into the drillhole adjacent to the fiber optic sensing device. A stiffness compliant, low failure strength grout is then pumped into the portion of the hole surrounding the active sensing portion of the fiber optic cable (see Figures 1 and 2). This grout is placed to a level in the drill hole slightly above the expected failure plane or monitoring cut-off point. The grout tube is then withdrawn from the hole.

The large diameter cased hole is then either filled with a low friction material (eg. bentonite) or left open. This low friction filler within the casing surrounding the armored sensor cable assists in shielding the armored sensor cable from point load and shear stresses. However, its primary purpose is to provide an environment conducive to translation of the armored sensor cable as deformation occurs within the failing rock/soil mass and thus within the casing. This will assist in prolonging the onset of failure of the armored sensor cable, increasing the life of the sensor cable monitoring system

After completion of the above steps, an OTDR test is then run to obtain baseline data for monitoring.

The OTDR system for detecting the location of displacement under and within displacing rock and soil masses is then ready for use.

ZOTTRICH Geotechnical monitoring

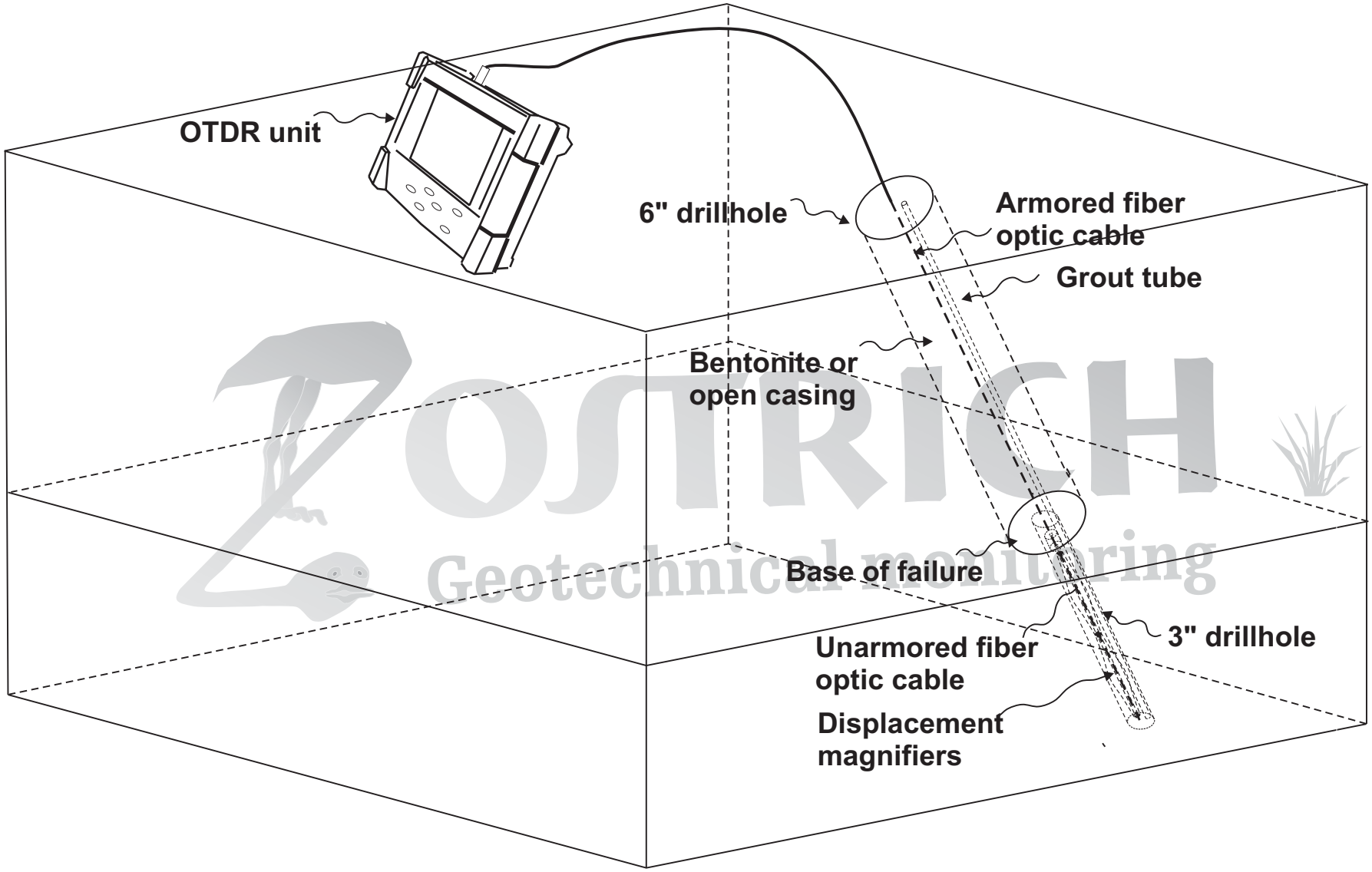

OTDR
SCHEMATIC - ACTIVE FAILURE MONITORING

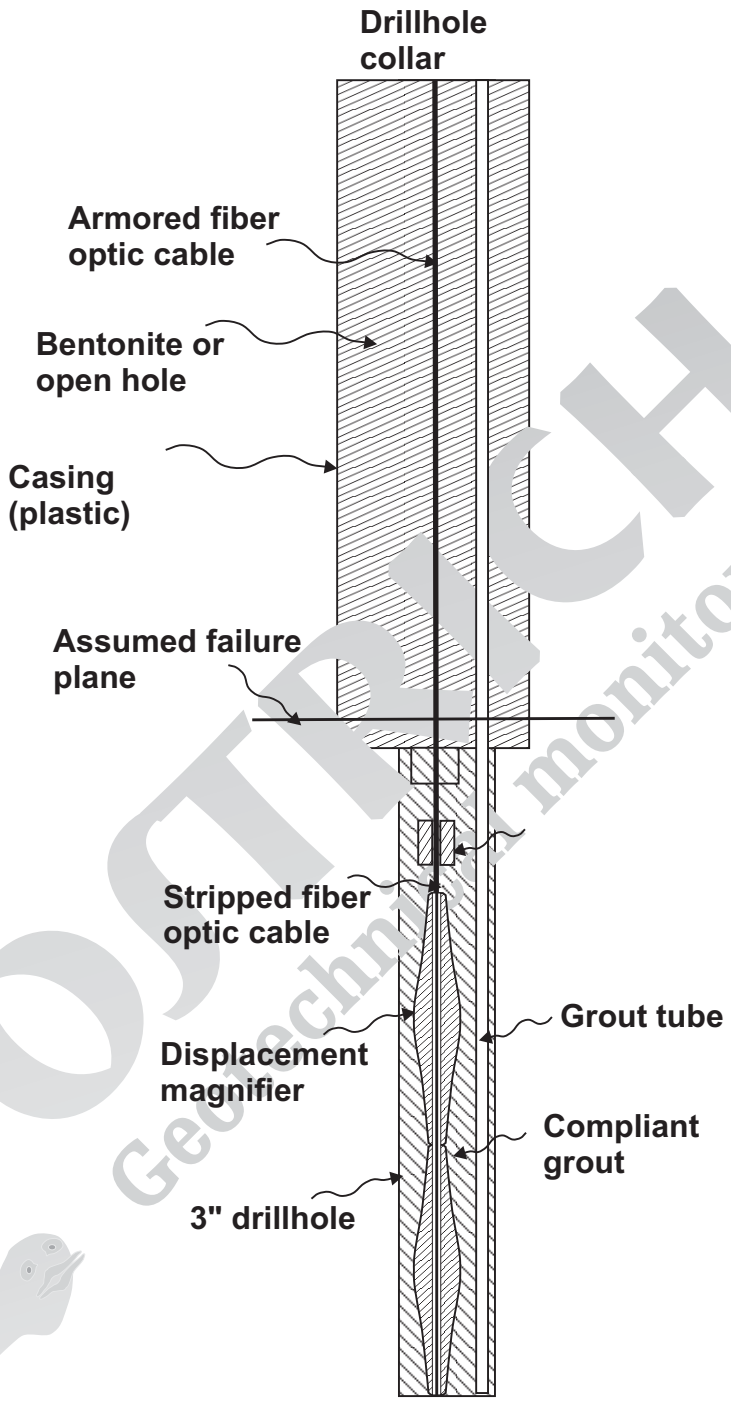

OTDR
SECTIONAL VIEW - ACTIVE FAILURE MONITORING

ZOTRICH Geotechnical monitoring